3×12 MATRIX LED DRIVER WITH AUTO BREATH

FEATURES

- 3 current switches, 12 current sinks, up to 36 LEDs or 12 RGBs
- Programmable matrix size
- 3 pattern controllers for auto breathing or group dimming control
- 16-level global current, 3.33mA~160mA
- Individual 64-level DIM currents
- Individual 256-level FADE currents
- Individual on/off control
- 400kHz I²C interface, 4 selectable addresses (I²C Address = 0x3A/0x3B/0x38/0x39)
- Fast display refreshing with multiple parameters updating simultaneously
- Multiple-device clock synchronization by CLKIO pin
- UVLO and Over-Temperature protection
- INTN interrupt output, low active
- QFN 4mmX4mmX0.75mm-32L package
- Power supply: VDD/VBAT(2.4~5.5V)

APPLICATIONS

- Smart speaker, Bluetooth speaker
- Gaming device (Keyboard, Mouse etc.)
- Mobile phone, PAD

GENERAL DESCRIPTION

The AW20036 is a 3×12 matrix LED driver programmed via an I²C compatible interface. The brightness of each LED is independently controlled by FADE and DIM parameter.

Three integrated pattern controllers provide auto breathing or group dimming control. Each pattern controller can work in auto breathing or manual control mode. All breathing parameters including rising/falling slope, on/off time, repeat times, min/max brightness and so on are configurable. Each LED's FADE parameter can sourced from any one of the 3 pattern controllers optionally.

Fast display refreshing is supported, multiple parameters(DIM, FADE and PAT) for each LED can be configured together through one I²C write without changing internal page register.

400kHz I²C interface is provided with 4 selectable addresses by AD pin. Multiple devices clock synchronization can be implemented by configuring the function of pin CLKIO.

AW20036 is available in QFN 4mmX4mmX0.75mm-32L package.

TYPICAL APPLICATION CIRCUIT

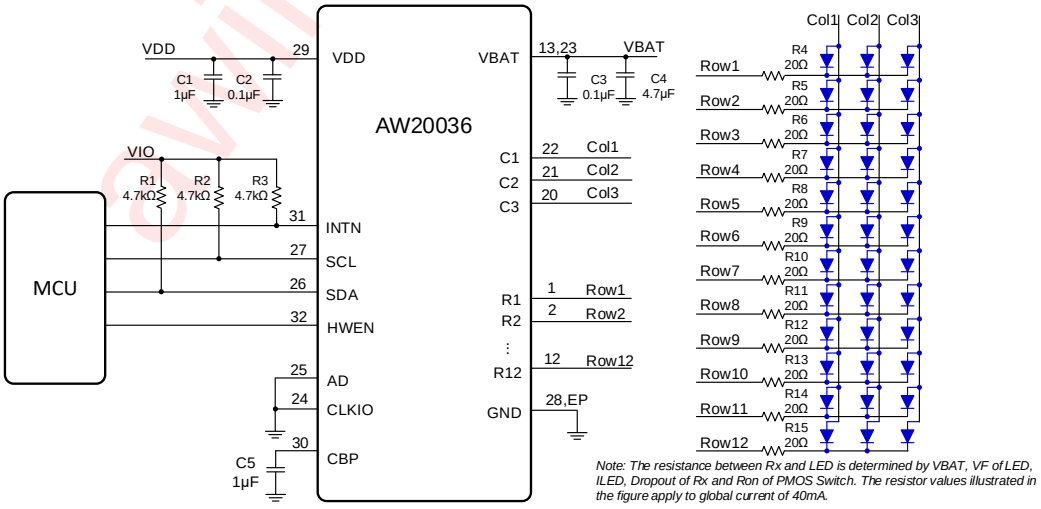

Figure 1 AW20036 Typical Application Circuit

All trademarks are the property of their respective owners.

awinic Confidential

 Copyright © 2018 SHANGHAI AWINIC TECHNOLOGY CO., LTD

PIN CONFIGURATION AND TOP MARK

AW20036QNR Pin Configuration
(Top View)

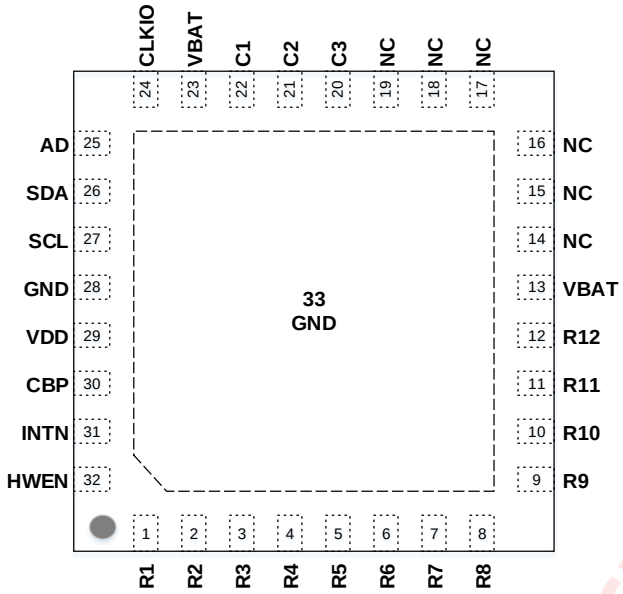

AW20036QNR Top Mark
(Top View)

3F3FT9 – AW20036QNR
XXXX – Production Tracing Code

Figure 2 Pin Configuration and Top Mark

PIN DEFINITION

No.	NAME	DESCRIPTION
1~12	R1~R12	Constant current sink, connect to LED's cathode
13,23	VBAT	Power supply
14~19	NC	No connect, must be floating
20~22	C3~C1	Current switch, connect to LED's anode in matrix display mode
24	CLKIO	Synchronize pin, used to synchronize clock in multiple devices application, internally pulled down to GND with a resistor of 1MΩ
25	AD	I^2C address select, connects to GND, VDD, SCL or SDA for different device address of I^2C. internally pulled down to GND with a resistor of 1MΩ
26	SDA	Serial data I/O for I^2C interface
27	SCL	Serial clock input for I2C interface
28	GND	Ground
29	VDD	Power supply
30	CBP	LDO output, must be connected to a at least 1μF bypass capacitor to GND
31	INTN	Interrupt output, open drain output, low active
32	HWEN	Hardware enable control, high active, internally pulled down to GND with a resistor of 1MΩ

awinic Confidential

 Copyright © 2018 SHANGHAI AWINIC TECHNOLOGY CO., LTD

No.	NAME	DESCRIPTION
33	GND	Ground

FUNCTIONAL BLOCK DIAGRAM

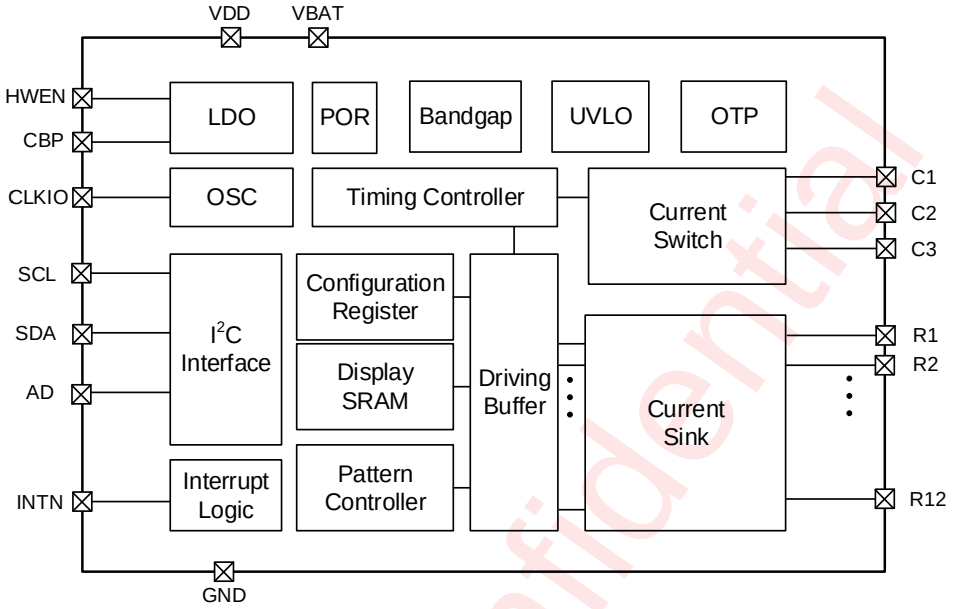

Figure 3 Functional Block Diagram

TYPICAL APPLICATION CIRCUIT

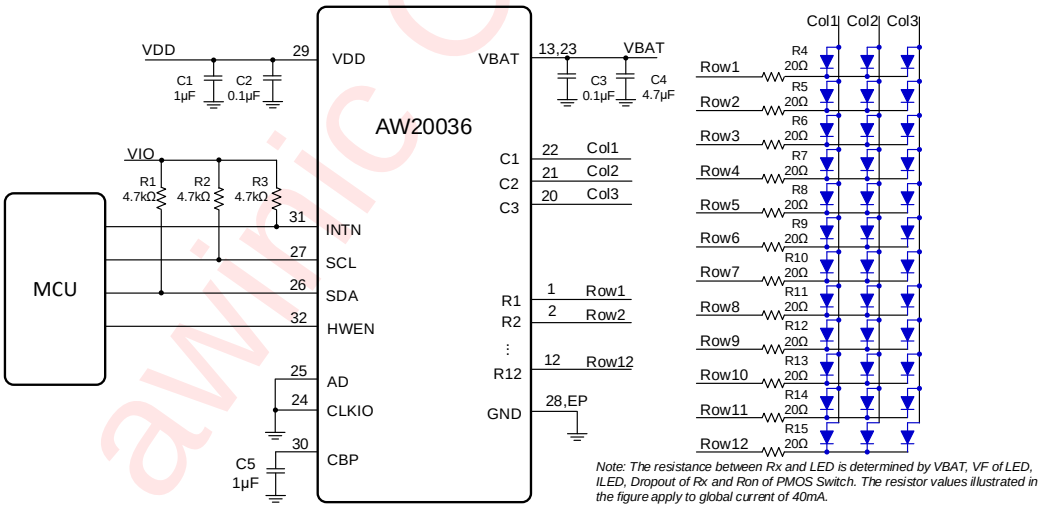

Figure 4 Typical Application Circuit

awinic Confidential

 Copyright © 2018 SHANGHAI AWINIC TECHNOLOGY CO., LTD

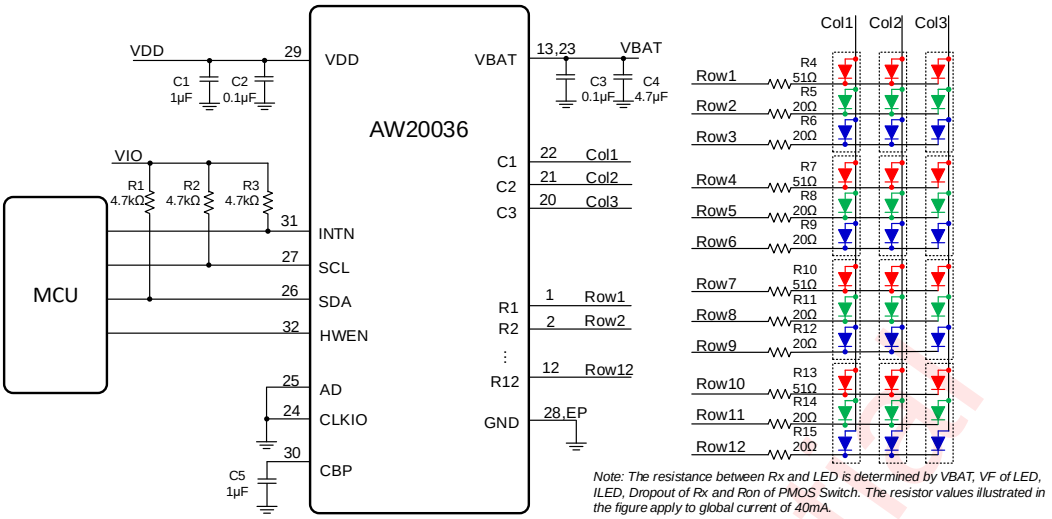

Figure 5 Typical Application Circuit (RGB)

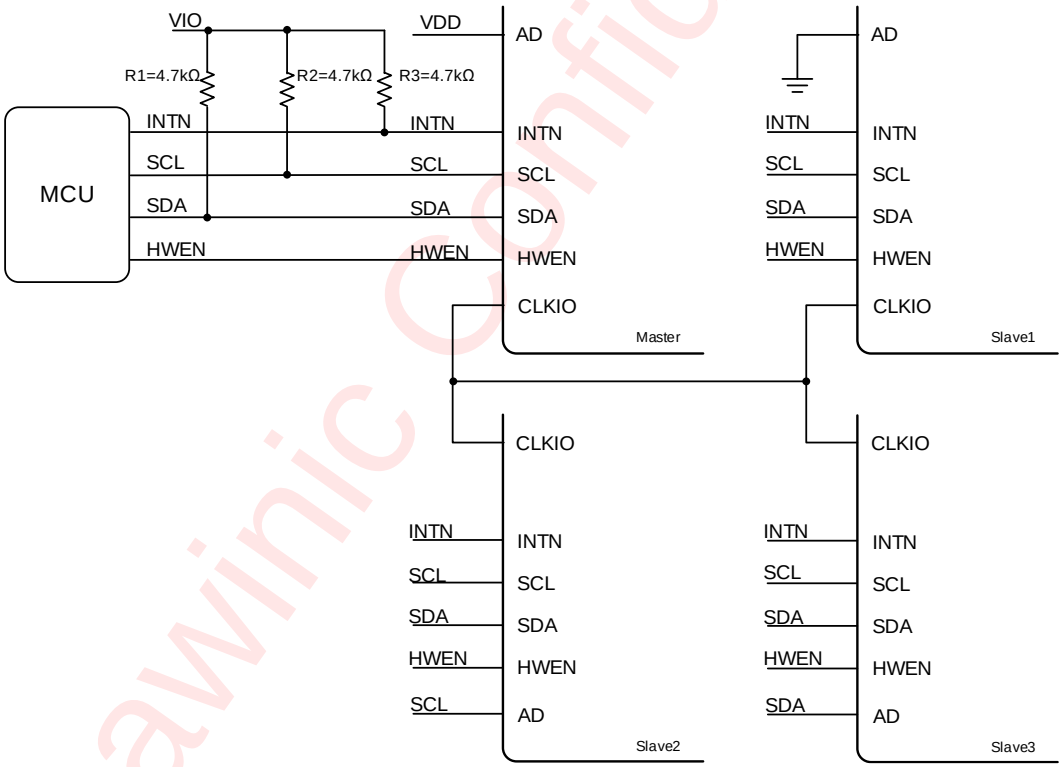

Figure 6 Typical Application Circuit (Four Parts Synchronization)

awinic Confidential

 Copyright © 2018 SHANGHAI AWINIC TECHNOLOGY CO., LTD

ORDERING INFORMATION

Part Number	Temperature	Package	Marking	MSL Level	ROHS	Delivery Form
AW20036QNR	-40℃~85℃	QFN 4mmX4mm-32L	3F3FT9	MSL3	ROHS+HF	6000 units/ Tape and Reel

AW20036 □□□

- Shipping
  R: Tape & Reel
- Package Type
  QN: QFN

ABSOLUTE MAXIMUM RATINGS(NOTE1)

PARAMETERS	RANGE
Supply Voltage Range V_{DD}	-0.3V to 6V
Supply Voltage Range V_{BAT}	-0.3V to 6V
Voltage on CBP	-0.3V to 2V
Voltage on SCL, SDA, AD, HWEN, INTN, CLKIO	-0.3V to V_{DD}
Maximum Power Consumption (PDmax,package@ TA=25°C)	3.84W
Junction-to-ambient Thermal Resistance θ_{JA}	30°C/W
Maximum Junction Temperature T_{JMAX}	160°C
Storage Temperature T_{STG}	-65°C to 150°C
Lead Temperature (Soldering 10 Seconds)	260°C
ESD(NOTE 2)	
HBM (human body model)	±2000V
CDM	±1500V
Latch-Up	
Test Condition: JESD78D	+IT:+200mA -IT:-200mA

NOTE1: Conditions out of those ranges listed in "absolute maximum ratings" may cause permanent damages to the device. In spite of the limits above, functional operation conditions of the device should within the ranges listed in "recommended operating conditions". Exposure to absolute-maximum-rated conditions for prolonged periods may affect device reliability.

NOTE2: The human body model is a 100pF capacitor discharged through a 1.5kΩ resistor into each pin. Test method: ESDA/JEDEC JS-001-2017.

awinic Confidential

 Copyright © 2018 SHANGHAI AWINIC TECHNOLOGY CO., LTD

ELECTRICAL CHARACTERISTICS

T_A=25°C,V_{DD}=2.8V, V_{BAT}＝4.2V (unless otherwise noted)

PARAMETER		TEST CONDITION	MIN	TYP	MAX	UNIT
Power supply voltage and current						
V_{DD}	Power supply voltage		2.4		5.5	V
V_{BAT}	Power supply voltage		2.4		5.5	V
I_{SD_VBAT}	Shutdown current of V_{BAT}	HWEN=GND, AD=GND		0.1	1	μA
I_{SD_VDD}	Shutdown current of V_{DD}	HWEN=GND, AD=GND		0.1	1	μA
I_{SB_VBAT}	Standby current of V_{BAT}	HWEN=VDD, AD=GND	9	18	27	μA
I_{SB_VDD}	Standby current of V_{DD}	HWEN=VDD, AD=GND	25	50	75	μA
I_{ACT_VBAT}	Quiescent current in active mode	VBAT= 4.2V, HWEN=VDD, SLPCR.SLEEP = 0, display off, AD=GND	15	25	35	μA
I_{ACT_VDD}		VDD = 2.8V, HWEN=VDD, SLPCR.SLEEP = 0, display off, AD=GND	150	225	300	μA
LED Driver						
$I_{MAX\text{-}10mA}$	Max current of each current sink(R1~R12)	IMAX[3:0]=0000	9	10	11	mA
$I_{MAX\text{-}40mA}$	Max current of each current sink(R1~R12)	IMAX[3:0]=0011	37.2	40	42.8	mA
$I_{MAX\text{-}160mA}$	Max current of each current sink(R1~R12)	IMAX[3:0]=0111	148.8	160	171.2	mA
I_{MATCH}	Match accuracy $I_{MATCH}=(I_{RX}-I_{LEDAVG}^{(Note1)})/I_{LEDAVG}$x100%	ILED=10mA	-10%		10%	
		ILED=40mA	-6%		6%	
		ILED=160mA	-5%		5%	
I_{LED}	Average current on each LED	IMAX[3:0]=0011, FADEn = 0xFF, DIMn = 0xFF, SIZE.SWSEL = 2	11.8	13.1	14.5	mA
		IMAX[3:0]=0111, FADEn = 0xFF, DIMn = 0xFF, SIZE.SWSEL = 2	48	53.3	58.6	mA

awinic Confidential

 Copyright © 2018 SHANGHAI AWINIC TECHNOLOGY CO., LTD

PARAMETER		TEST CONDITION	MIN	TYP	MAX	UNIT
$V_{DROPOUT}$	Dropout voltage for Rx	ILED=40mA	50	100	200	mV
		ILED=160mA	90	180	360	mV
PMOS Switch						
R_{ON}	PMOS on-resistance for Cx			0.6	1	Ω
OSC						
F_{OSC}	OSC clock frequency		3.8	4.0	4.2	MHz
CLKIO, AD, HWEN						
V_{OH}	Output high level	CLKIO, I_{OH} = -2mA	V_{DD}-0.2			V
V_{OL}	Output low level	CLKIO, I_{OL} = 7.5mA			0.2	V
V_{IH}	Input high level	CLKIO, AD, HWEN	1.3			V
V_{IL}	Input low level	CLKIO, AD, HWEN			0.4	V
R_{PD}	Pull down resistance	CLKIO, AD, HWEN		1M		Ω
INTN						
V_{OL}	Output low level	I_{OL} = 10 mA			0.1	V
I^2C Interface						
V_{OL}	Output low level	SDA,I_{OL} = 10 mA			0.1	V
V_{IH}	Input high level	SCL,SDA	1.3			V
V_{IL}	Input low level	SCL,SDA			0.4	V
t_{DEG_SDA}	Deglitch time	SDA		200		ns
t_{DEG_SCL}	Deglitch time	SCL		150		ns

Note1: I_{RX} is the sink current of R1~R12, $I_{LEDAVG}=(I_{R1}+I_{R2}+\ldots+I_{R12})/12$

awinic Confidential

 Copyright © 2018 SHANGHAI AWINIC TECHNOLOGY CO., LTD

I²C INTERFACE TIMING

PARAMETER		MIN	TYP	MAX	UNIT
F_{SCL}	Interface Clock frequency	-		400	kHz
$T_{HD:STA}$	(Repeat-start) Start condition hold time	0.6		-	μs
T_{LOW}	Low level width of SCL	1.3		-	μs
T_{HIGH}	High level width of SCL	0.6		-	μs
$T_{SU:STA}$	(Repeat-start) Start condition setup time	0.6		-	μs
$T_{HD:DAT}$	Data hold time	0		-	μs
$T_{SU:DAT}$	Data setup time	0.1		-	μs
T_R	Rising time of SDA and SCL	-		0.3	μs
T_F	Falling time of SDA and SCL	-		0.3	μs
$T_{SU:STO}$	Stop condition setup time	0.6		-	μs
T_{BUF}	Time between start and stop condition	1.3		-	μs

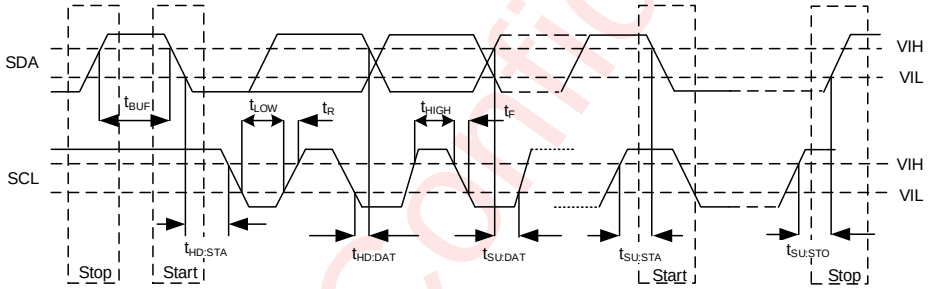

Figure 7 I²C Interface Timing

awinic Confidential

 Copyright © 2018 SHANGHAI AWINIC TECHNOLOGY CO., LTD

DETAILED FUNCTIONAL DESCRIPTION

Power On Reset

When the supply voltage VDD drops below a predefined voltage V_{POR} (1.25V), the device enters shutdown mode, and generate a reset signal to perform a power-on reset operation, which will reset all control circuits and configuration registers.

Power On Procedure

After HWEN pin set high the chip begins to load the OTP information, which takes 200μs to complete. When bit SLEEP is set to "0", about 200μs wait time is needed for internal oscillator startup and display SRAM initialization. After display SRAM initialization, the registers in page1 to page5 can be configured via I²C interface. In addition, if VDD sets up later than HWEN, the chip will not be abnormal. Below is the recommended power on timing:

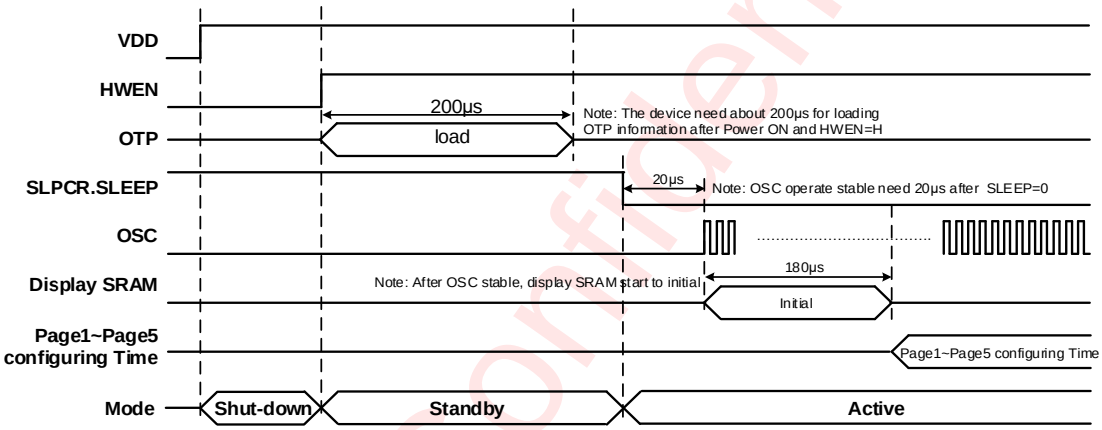

Figure 8 AW20036 power on Timing

Operating Mode

There are three operating modes in the device: Shut-down, Stand-by and Active mode.

Shut-down Mode

The device is in the shut-down mode when HWEN level is low. In shut-down mode, all internal circuits and configuration registers are reset, and the current consumption is very low (<1μA).

Standby Mode

The device enters into standby mode after pulling pin HWEN to high in shut-down mode or writing 0x80 to register SLPCR (page0,address = 0x01) via I²C interface in active mode. In standby mode, only part of internal circuit work, the OSC still keep switched off and no internal clock is available, the LDO operates in low power state.

In standby mode, the I²C interface is accessible, but only registers in page0 can be configured, page1~ page 5 is inaccessible.

Active Mode

When 0x00 is written into register SLPCR via I²C interface in standby mode, the device enters into the active mode.

awinic Confidential

 Copyright © 2018 SHANGHAI AWINIC TECHNOLOGY CO., LTD

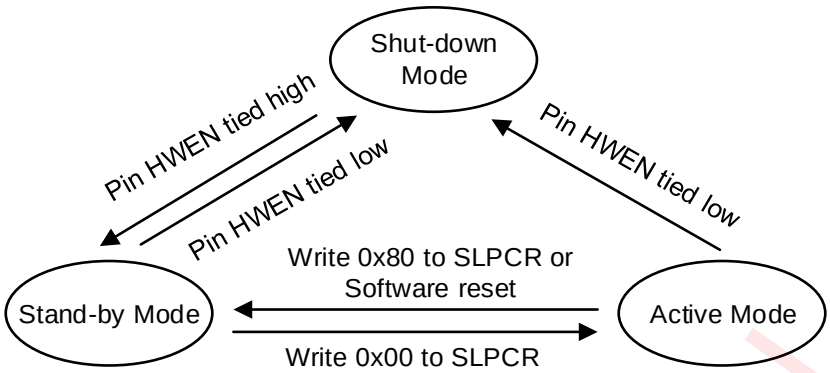

Figure 9 AW20036 Operating Mode Transition

Software Reset

Writing 0x01 to register RSTR (page0, address=0x02) via I²C interface will reset all internal circuits and configuration registers. After the soft reset command is send through the I²C interface, it takes at least 1ms for chip to acknowledge the new I²C command.

I²C Interface

The device supports the I²C serial bus and data transmission protocol. It operates as a slave on the I²C bus. The maximum clock frequency specified by the I²C standard is 400kHz. Connect to the bus are made via the open-drain I/O pins SCL and SDA. The pull-up resistor can be selected in the range of 1k~10kΩ and the typical value is 4.7kΩ when I²C frequency is 400kHz. Different high level from1.8V to 3.3V of this I²C interface is supported.

Device Address

The I²C device address is 7-bit (A7~A1), followed by the R/W bit, A0 (Read=1/Write=0). Set A0 to “0” for a write command and set A0 to “1” for a read command. The values of A1 and A2 are depended on the connection of pin AD, there are 4 options: VDD, GND, SCL and SDA. The A7 to A3 is “01110” constantly. The complete slave address is:

AD pin	A7:A3	A2:A1	A0	Device address
VDD	01110	11	0/1	3BH
GND		10		3AH
SCL		00		38H
SDA		01		39H

I²C Start/Stop

I²C start: SDA changes from high level to low level when SCL is high level.

I²C stop: SDA changes from low level to high level when SCL is high level.

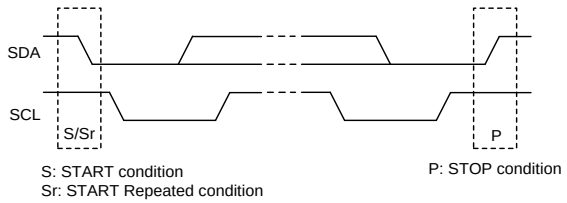

Figure 10 I²C Start/Stop Condition Timing

awinic Confidential

 Copyright © 2018 SHANGHAI AWINIC TECHNOLOGY CO., LTD

Data Validation

When SCL is high level, SDA level must be constant. SDA can be changed only when SCL is low level.

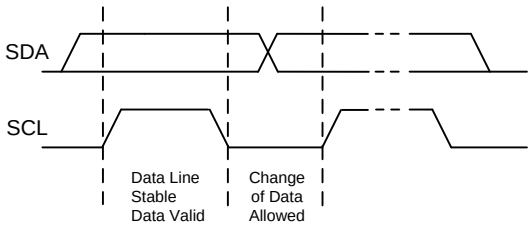

Figure 11 Data Validation Diagram

ACK (Acknowledgement)

ACK means the successful transfer of I²C bus data. After master sends an 8-bit data, SDA must be released; SDA is pulled to GND by slave device when slave acknowledges.

When master reads, slave device sends 8-bit data, releases the SDA and waits for ACK from master. If ACK is send and I²C stop is not send by master, slave device sends the next data. If ACK is not send by master, slave device stops to send data and waits for I²C stop.

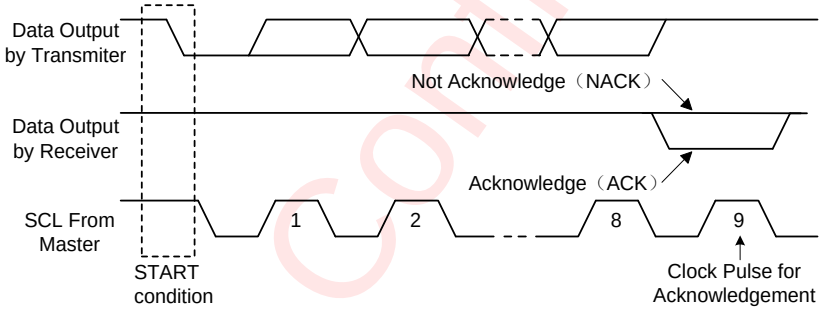

Figure 12 I²C ACK Timing

Write Cycle

One data bit is transferred during each clock pulse. Data is sampled during the high state of the serial clock (SCL). Consequently, throughout the clock's high period, the data should remain stable. Any changes on the SDA line during the high state of the SCL and in the middle of a transaction, aborts the current transaction. New data should be sent during the low SCL state. This protocol allows a single data line to transfer both command/control information and data using the synchronous serial clock.

Each data transaction is composed of a start condition, a number of byte transfers (set by the software) and a stop condition to terminate the transaction. Every byte written to the SDA bus must be 8 bits long and is transferred with the most significant bit first. After each byte, an Acknowledge signal must follow.

In a write process, the following steps should be followed:

a) Master device generates START condition. The "START" signal is generated by lowering the SDA signal while the SCL signal is high.

b) Master device sends slave address (7-bit) and the data direction bit (R/W = 0).

c) Slave device sends acknowledge signal if the slave address is correct.

d) Master sends control register address (8-bit)

awinic Confidential

 Copyright © 2018 SHANGHAI AWINIC TECHNOLOGY CO., LTD

e) Slave sends acknowledge signal

f) Master sends data byte to be written to the addressed register

g) Slave sends acknowledge signal

h) If master will send further data bytes the control register address will be incremented by one after acknowledge signal (repeat step f and g)

i) Master generates STOP condition to indicate write cycle end

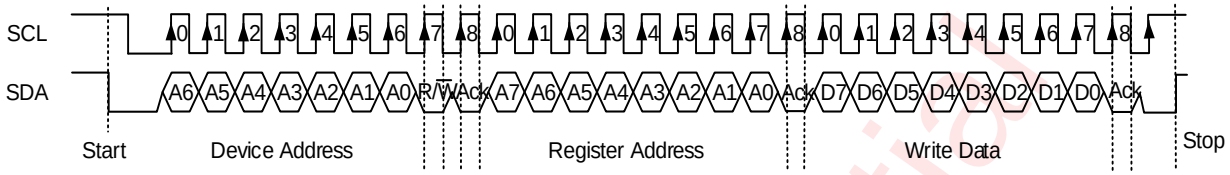

Figure 13 I²C Write Byte Cycle

Read Cycle

In a read cycle, the following steps should be followed:

a) Master device generates START condition

b) Master device sends slave address (7-bit) and the data direction bit (R/W = 0).

c) Slave device sends acknowledge signal if the slave address is correct.

d) Master sends control register address (8-bit)

e) Slave sends acknowledge signal

f) Master generates STOP condition followed with START condition or REPEAT START condition

g) Master device sends slave address (7-bit) and the data direction bit (R/W = 1).

h) Slave device sends acknowledge signal if the slave address is correct.

i) Slave sends data byte from addressed register.

j) If the master device sends acknowledge signal, the slave device will increase the control register address by one, then send the next data from the new addressed register.

k) If the master device generates STOP condition, the read cycle is ended.

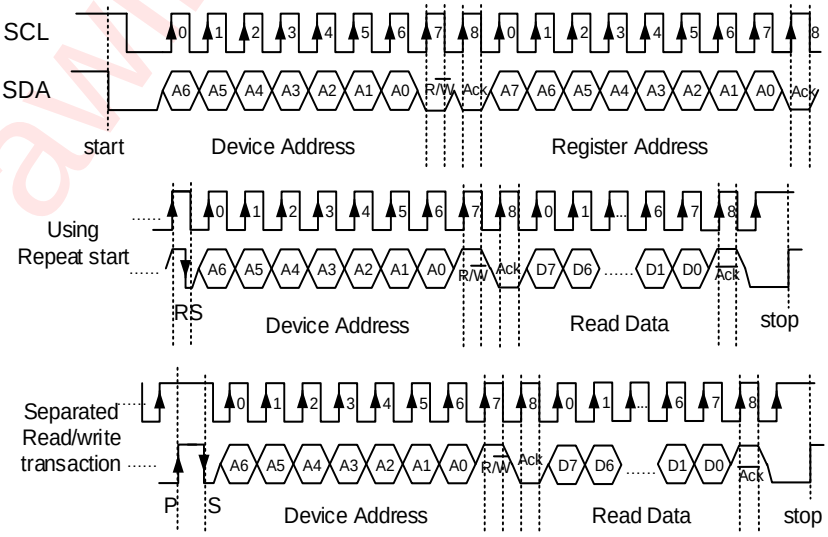

Figure 14 I²C Read Byte Cycle

awinic confidential

 Copyright © 2018 SHANGHAI AWINIC TECHNOLOGY CO., LTD

Under Voltage Lock Out (UVLO)

When bit UVLOE in register FLTCFG1(page0, address=0x09) is set to “1”, the device monitors the voltage on pin VDD.If voltage of VDD is detected below predefined threshold (2.0v typically) by bits UVTH[1:0] in register FLTCFG2(page0,address=0x0A), the UVLO flag bit, UVLOIS in register ISRFLT(page0,address=0x0B) is set to “1”. The status will not be cleared until an I^2C read on register ISRFLT.

If bit UVLOPE in register FLTCFG1 is set to “1”, UVLO protection function is enabled. Once UVLO condition is met, the device will stop LED driving, set bit SLEEP in register SLPCR (page0,address=0x01) to “1”, and return to stand-by state at once. If voltage on pin VDD rises above the UVLO threshold and SLEEP bit of register SLPCR is set to “0”, the device will enter into active mode again.

By default, control bits UVLOE, UVLOPE are all “0”. Both UVLO monitor and protection are disabled.

Bit UVIE of register FLTCFG1 is the interrupt enable bit for UVLO. If UVLOIS is “1” and bit UVIE is “1”, an interrupt request will be triggered by pulling pin INTN down to low.

Over Temperature Protection (OTP)

When bit OTE in register FLTCFG1(page0,address=0x09) is set to “1”, the over-temperature detection is enabled. If the temperature of this device is detected over 140℃, the over-temperature condition is triggered, and the OTPIS flag bit in register ISRFLT(page0,address=0x0B) is set to “1”. The status of OTPIS=1 will be keep until an I^2C read on the register ISRFLT.

If bit OTPE in register FLTCFG1 is set to “1”, the Over-Temperature Protection (OTP) function is enable. When over-temperature condition is met, the device will stop LED driving, set the SLEEP bit of register SLPCR, and return to stand-by mode automatically at once. Once the temperature of the device drops below 120℃, and bit SLEEP of register SLPCR is set to “0”, the device will return to active mode again.

By default, control bits OTE and OTPE are all “0”, both over-temperature monitor and OTP protection are disabled.

Bit OTIE of register FLTCFG1 is the interrupt enable bit for OTP. If OTIS is “1” and bit OTIE is “1”, interrupt request will be triggered by pulling pin INTN down to low.

LED Display and Control

Matrix Scan Display Mode

The device supports up to 36 LEDs in scan display mode, R1~R12 are constant current sinks, C1~C3 are current switches. When the device is in active mode, the device will automatically scan each column of the device in sequence from C1 to C3. The scanning frequency is about 555Hz . The scan waveform is shown below.

awinic Confidential

 Copyright © 2018 SHANGHAI AWINIC TECHNOLOGY CO., LTD

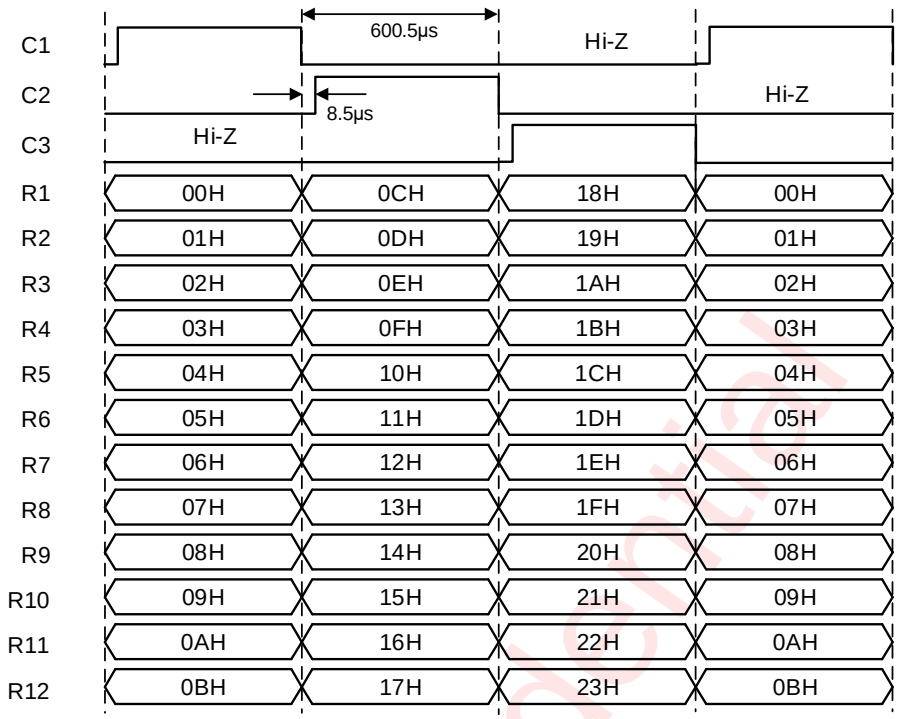

Figure 15 Scan Drive Operation of AW20036

Individual LED Current Control

Each LED's brightness can be independently configured. The figure below shows the LED current control of AW20036. The brightness level of each LED is determined by value of I_{MAX} , DIM, FADE and DUTY.

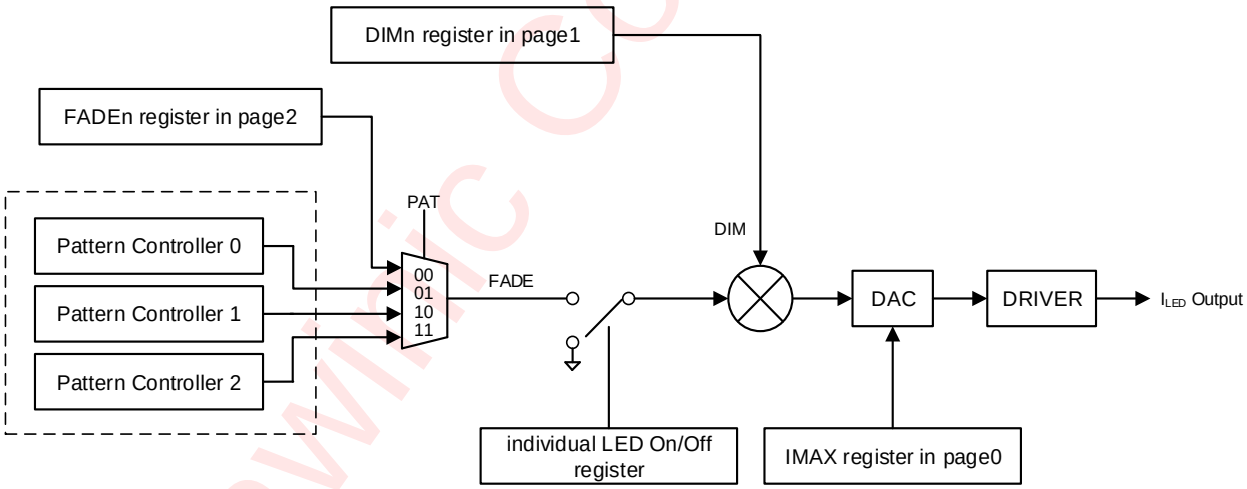

Figure 16 LED Current Control

The output current of each LED is calculated by the following formula:

$$I_{LED} = \begin{cases} I_{MAX} \times \frac{DIM}{63} \times \frac{FADE+1}{256} \times DUTY & (FADE \neq 0) \\ 0 & (FADE = 0) \end{cases}$$

I_{MAX} is the global current for all LEDs, which is configured from 3.3mA to 160mA by bits IMAX[3:0] in register GCCR(page0, address=0x03). DIM is the individual DC current which is configured by register DIMn (page1, address=0x00~0x23, n=0~35). FADE is the individual scaling control of DC current, configured by register FADEm (page2, address = 0x00~0x23, m=0~35) or sourced from specified pattern controller via setting of

 Copyright © 2018 SHANGHAI AWINIC TECHNOLOGY CO., LTD

register PATn (page3, address=0x00~0x23, n=0~35). DUTY is duty ratio of display scan, which is related to the number of active current switch, configured by bits SWSEL[3:0] in register SIZE (page0, address=0x80). The value of DUTY is determined by the following formula:

$$DUTY = \frac{592\mu s}{600.5\mu s} \times \frac{1}{SWSEL + 1}$$

Display Content Updating

The device supports up to 36 LEDs. The location of each LED is shown by the following figure.

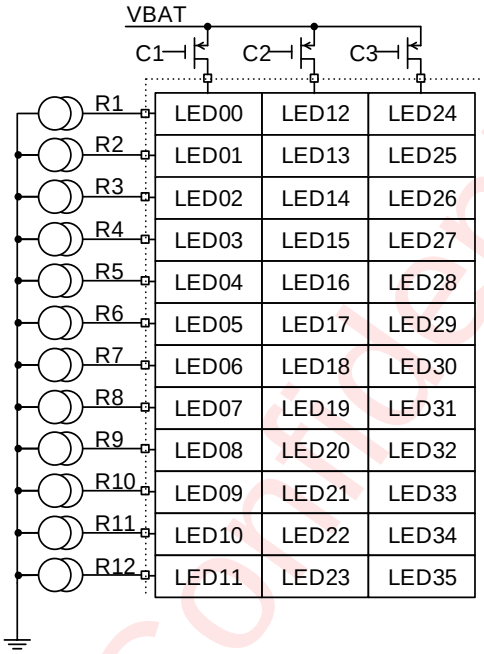

Figure 17 LED Location

In stand-by mode, only registers in page0 is configurable via I²C interface, but registers in page1 to page5 is inaccessible. After 0x00 has been written into register SLPCR and the device has been in active mode for about 200μs, page1 to page5 become accessible.

In AW20036, each LED is controlled by 4 independent parameters:

- On/Off control, bit ONx in registers LEDONx (page0, address=0x31~0x36). When bit ALLON in register GCCR (page0, address=0x03) is set, all LEDs are switched on, and registers LEDONx are ignored.
- DIM[5:0] control, register DIMn (page1, address=0x00~0x23)
- FADE[7:0] control, register FADEn (page2, address=0x00~0x23)
- PAT[1:0] selection, register PATn (page3, address= 0x00~0x23)

User can program above parameters to control each LED to be on/off directly, or control its brightness by adjusting DIM and FADE current level. Via configuring registers PATn (n=0~35), a group of LEDs can be controlled by an internal pattern controller to dimming synchronously or output the same breathing lighting effect.

The device supports multiple parameters fast updating. The DIM, FADE and PAT parameters of each LED is distributed in page1, page2 and page3 respectively. The page4 and page5 are virtual pages. In page4, DIM and FADE parameter of each LED are put together one by one, so it is easy to update both DIM and FADE in the order of LED in very short time via one continuous write operation of I²C. Similarly, in page5, DIM,FADE

awinic Confidential

 Copyright © 2018 SHANGHAI AWINIC TECHNOLOGY CO., LTD

and PAT parameter of each LED are put together so as to make the process of updating all display parameter very quickly. The following figure shows the distribution of display parameter in different page.

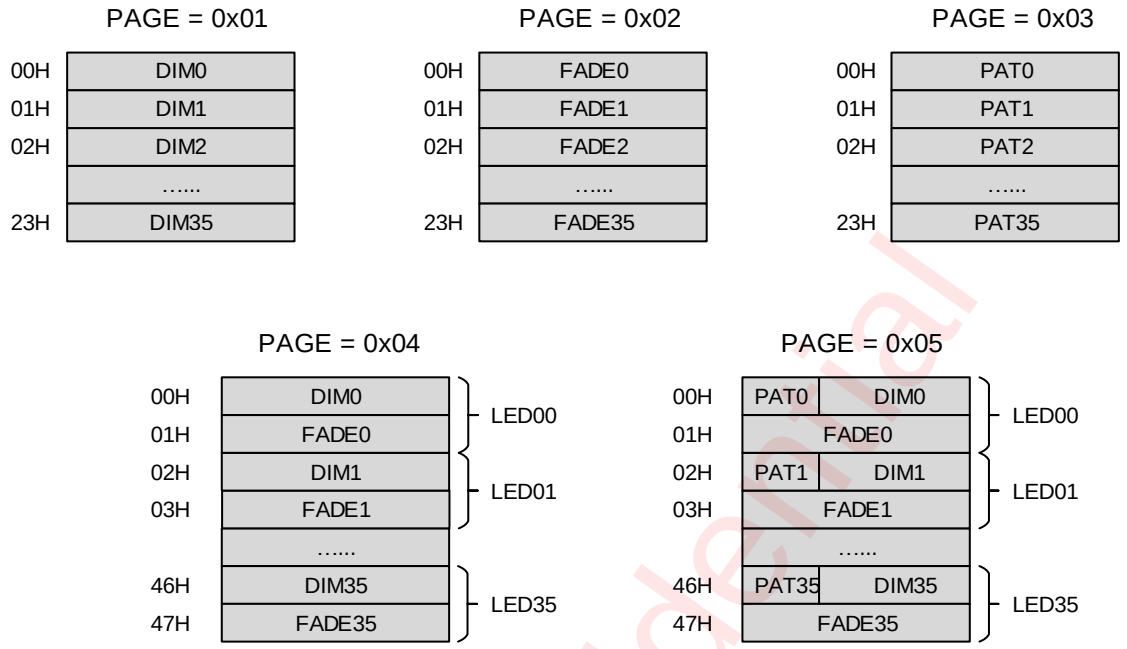

Figure 18 Display Parameter Distribution in Page1~Page5

awinic Confidential

 Copyright © 2018 SHANGHAI AWINIC TECHNOLOGY CO., LTD

The following flow diagram describes the general configuring process for LED display and updating.

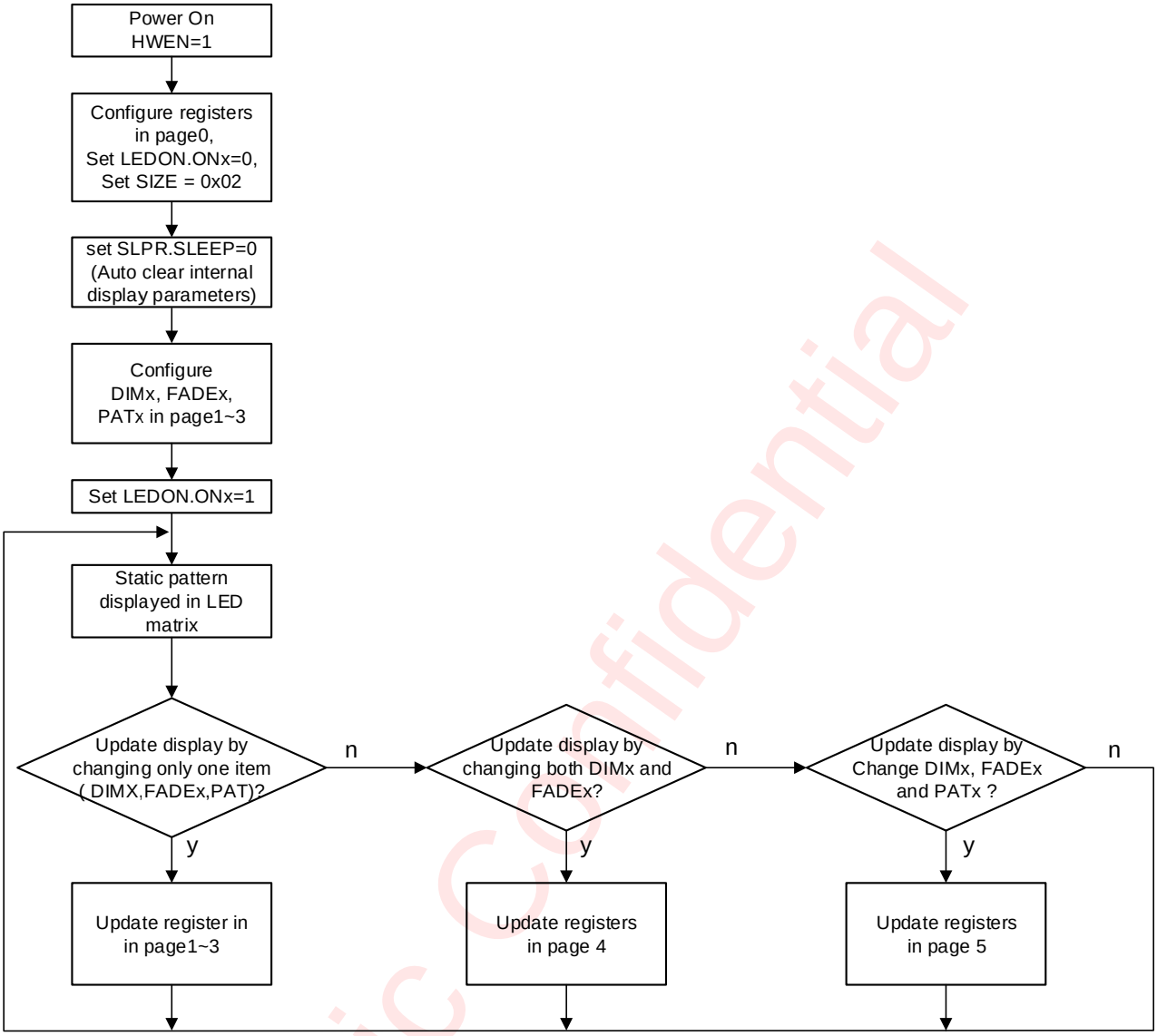

Figure 19 Configuration Process of AW20036

Pattern Controllers

There are three pattern controllers in the device. When bit PATxEN (x=0~2) in register PATCR (page0, address = 0x43) is set, corresponding pattern controller is enabled. Each pattern controller could be configured to work in autonomous breathing mode or manual-controlled mode. Individual LED can be configured by register PAT in page 3 independently to select its FADE parameter sourced from FADE register or one of the three pattern controllers.

Autonomous Breathing Mode

When bit PATMD in register PATxCFG (page0,address=0x56, 0x57, 0x58, x=0~2) is set to 1, the pattern controller works in autonomous breathing mode. In this mode, the pattern controller will generate a breathing lighting effect, which is configured by the user-defined timing parameter. The waveform of the breathing lighting effect is shown in the following figure. The parameter T1~T4 define 4 key primary time in a complete breathing period. T1~T4 composite a breathing loop, denoting the rise-time, on-time, fall-time and off- time

awinic Confidential

 Copyright © 2018 SHANGHAI AWINIC TECHNOLOGY CO., LTD

respectively. FADEH and FADEL are the max and min value of FADE, configurable by registers FADExH (page0,address=0x44, 0x45, 0x46, x=0~2) and FADExL(page0,address=0x47, 0x48, 0x49, x=0~2) respectively. By default, both the value of registers FADExH and FADExL are 0x00.

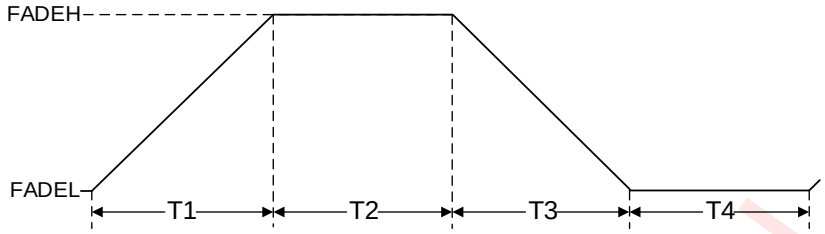

Figure 20 LED breath timing in pattern mode

The start point and end point of autonomous breathing loop configurable. The loop starting point could be selected among T1~T4, which is set by bits LB[1:0] in register PATxT2 (page0,address=0x4c, 0x50, 0x54, x=0~2). The end point of the loop can only be selected between the end of T1 and the end of T3, which is determined by bits LE[1:0] in register PATxT2. The calculation method of the loop times is determined by the end point defined. If bits LE[1:0] is not “00”, the end point of breathing loop is the end of T1, and the loop counter increment by 1 at the end of T1. If bit LE[1:0] is “00”, the loop end point is the end of T3, and the loop counter increment by 1 at the end of T3.

The loop times is configured by parameter LT[11:0] in register PATxT2(page0,address=0x4c, 0x50, 0x54, x=0~2) and register PATxT3 (page0,address=0x4d, 0x51, 0x55, x=0~2). When LT[11:0] are 0, the breathing loop is infinite.

After defined loop times has finished, the status bit PATxIS in register ISRFLT (page0,address=0x05, x=0~2) will be set to “1”. If the corresponding interrupts enable bit PATxIE in register PATE (page0, address=0x43) is set to “1”, the pin INTN will be pulled down. When the host reads register ISRFLT, the interrupt status register ISRFLT is cleared and pin INTN return to high.

Once breathing loop start again or pattern controller switches to manual mode by setting PATMD bit to “0”, the PATxIS will be cleared.

When bit RUNx in register PATGO (page0, address=0x59, x=0~2) is set to 1, pattern x(x =0~2) is started. The complete start process of the autonomous breathing machine is as follows:

a) Set FADE, DIM parameter(FADE parameter sourced from FADE register in page2)

b) Set corresponding LED individual on/off control register(FADE parameter sourced from FADE register in page2)

c) Set pattern selection register PATn in page3(FADE parameter sourced from FADE register in page2)

d) Configure PATxT0, PATxT1, PATxT2, PATxT3 for parameters T1~T4 , start/stop point, and repeat times. (FADE parameter sourced from FADE register in page2)

e) Set PATCR.PATxEN to “1”(FADE parameter sourced from pattern controller)

f) Set PATxCFG.PATMD to “1”

g) Set PATGO.RUNx to “1”

Manual Control Mode

If bit PATMD in registers PATxCFG (page0, address = 0x56, 0x57, 0x58, x=0~2) is set to “0”, manual mode is selected for corresponding pattern controller.

In manual control mode, user could program the bit SWITCH in register PATxCFG (page0, address =0x56,0x57,0x58, x=0~2) to control the output of pattern controller. When bit SWITCH is “1”, the output of

awinic Confidential

 Copyright © 2018 SHANGHAI AWINIC TECHNOLOGY CO., LTD

pattern controller is the value set by register FADEHx.(page0,address=0x44, 0x45, 0x46 x= 0~2). When bit SWITCH is “0”, the output of pattern controller is the value set by register FADELx (page0,address =0x47, 0x48, 0x49, x=0~2).

If bit RAMPEN in register PATxCFG is set to “1”, the smooth ramp up/down will be enabled. At this time, if the bit SWITCH change from “0” to “1”, the output FADE value of the pattern controller will be smoothly ramp up to FADEHx. If bit SWITCH change from “1” to “0”, the output FADE of the pattern controller will ramp down smoothly to FADELx.

If the bit RAMPEN is “0”, the ramp up/down function is turned off. The output FADE of the pattern controller change to FADEHx or FADELx directly based on the value of PATCFGx.SWITCH.

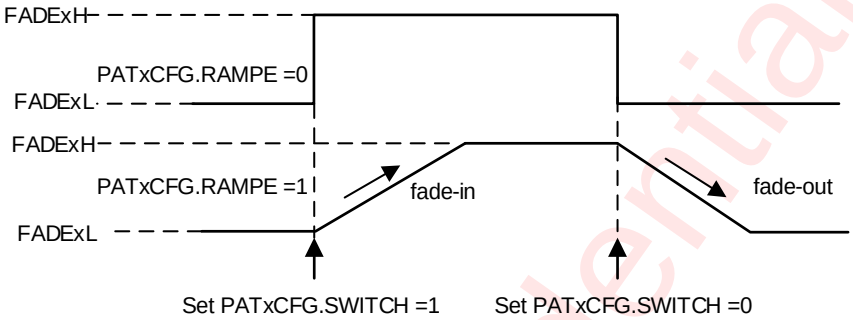

Figure 21 Manual Control Mode

Exponent Current Mode

The device supports exponential current mode, which is enabled when the bit EXPEN in register GCCR.(page0, address= 0x03) is set to “1”. In this mode, only the low 6-bit of FADEn register in page2 is valid, it will be internally converted to 8-bit exponential current.

Multiple Device Synchronization

The AW20036 supports multiple device synchronization to drive more than 36 LEDs by cascade of multiple devices. In this application, all devices share a common clock, one device works as a master to output common clock on pin CLKIO, and other devices work as slave to use external input clock from pin CLKIO.

Bit CLK_IO and CLK_SEL in register CLKSYS (page0,address=0x05) select the clock input or output on pin CLKIO

CLK_IO	CLK_SEL	Device Clock Selection
0	0	Use Internal clock and pin CLKIO is high-Z
1	0	Master, use internal clock and output it on pin CLKIO
0	1	Slave, use external clock from pin CLKIO
1	1	Forbidden

awinic Confidential

 Copyright © 2018 SHANGHAI AWINIC TECHNOLOGY CO., LTD

REGISTER CONFIGURATION

Register Control

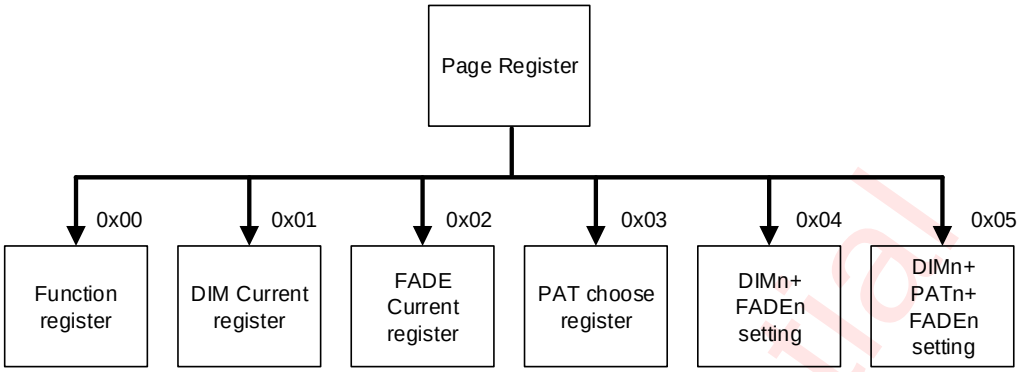

Figure 22 Register Control

Register List

Add.	Name	W/R	Function description	Default Value
Page = 0x00,0x01,0x02,0x03,0x04,0x05				
F0H	PAGE	R/W	Page configuration	00H
Page = 0x00: Function registers				
00H	IDR	R	Chip ID	18H
01H	SLPCR	R/W	Sleep mode control	80H
02H	RSTR	W	Soft reset	00H
03H	GCCR	R/W	Global current configuration	10H
04H	FCD	W	Fast clear display	00H
05H	CLKSYS	R/W	Clock control	00H
09H	FLTCFG1	R/W	Fault configuration register1	00H
0AH	FLTCFG2	R/W	Fault configuration register2	00H
0BH	ISRFLT	R	Interrupt status	00H
31H	LEDON0	W	Individual LED on/off control	00H
32H	LEDON1	W	Individual LED on/off control	00H
33H	LEDON2	W	Individual LED on/off control	00H
34H	LEDON3	W	Individual LED on/off control	00H
35H	LEDON4	W	Individual LED on/off control	00H
36H	LEDON5	W	Individual LED on/off control	00H
43H	PATCR	R/W	Pattern enable control	00H
44H	FADEH0	R/W	Maximum breathing level of pattern0	00H
45H	FADEH1	R/W	Maximum breathing level of pattern1	00H
46H	FADEH2	R/W	Maximum breathing level of pattern2	00H
47H	FADEL0	R/W	Minimum breathing level of pattern0	00H
48H	FADEL1	R/W	Minimum breathing level of pattern1	00H
49H	FADEL2	R/W	Minimum breathing level of pattern2	00H
4AH	PAT0T0	R/W	T1 & T2 configuration of pattern0	00H
4BH	PAT0T1	R/W	T3 & T4 configuration of pattern0	00H
4CH	PAT0T2	R/W	Loop configuration register1 of pattern0	00H
4DH	PAT0T3	R/W	Loop configuration register2 of pattern0	00H
4EH	PAT1T0	R/W	T1 & T2 configuration of pattern1	00H
4FH	PAT1T1	R/W	T3 & T4 configuration of pattern1	00H
50H	PAT1T2	R/W	Loop configuration register1 of pattern1	00H
51H	PAT1T3	R/W	Loop configuration register2 of pattern1	00H
52H	PAT2T0	R/W	T1 & T2 configuration of pattern2	00H
53H	PAT2T1	R/W	T3 & T4 configuration of pattern2	00H
54H	PAT2T2	R/W	Loop configuration register1 of pattern2	00H

awinic confidential

 Copyright © 2018 SHANGHAI AWINIC TECHNOLOGY CO., LTD

Add.	Name	W/R	Function description	Default Value
55H	PAT2T3	R/W	Loop configuration register2 of pattern2	00H
56H	PAT0CFG	R/W	Mode configuration of pattern0	00H
57H	PAT1CFG	R/W	Mode configuration of pattern1	00H
58H	PAT2CFG	R/W	Mode configuration of pattern2	00H
59H	PATGO	R/W	Start pattern 0/1/2	00H
80H	SIZE	R/W	Display size configuration	08H
Page=0x01: DIM current setting				
00H~23H	DIMn	W	DIM current configuration	00H
Page=0x02: FADE current setting				
00H~23H	FADEn	W	FADE current configuration	00H
Page=0x03: PAT selection setting				
00H~23H	PATn	W	Pattern selection	00H
Page=0x04: DIM and FADE setting				
00H~47H	DIMn+ FADEn	W	DIM and FADE configuration of each LED	00H
Page=0x05: DIM, PAT and FADE setting				
00H~47H	PATn/DIMn +FADEn	W	PAT, DIM and FADE configuration of each LED	00H

Register Bit Map

PAGE = 0x00,0x01,0x02,0x03,0x04,0x05

Add.	Name	W/R	BIT7	BIT6	BIT5	BIT4	BIT3	BIT2	BIT1	BIT0
F0H	PAGE	R/W	-	-	-	-	-	PAGE		

PAGE = 0x00

Add.	Name	W/R	BIT7	BIT6	BIT5	BIT4	BIT3	BIT2	BIT1	BIT0
00H	IDR	R	ID							
01H	SLPCR	R/W	SLEEP	-	-	-	-	-	-	-
02H	RSTR	R/W	SW_RSTN							
03H	GCCR	R/W	IMAX				ALLON	-	-	EXPEN
04H	FCS	W	-	-	-	-	-	-	-	FCDE
05H	CLKSYS	R/W	-	-	-	-	-	-	CLK_IO	CLK_SEL
09H	FLTCFG1	R/W	-	-	UVLOPE	OTPE	UVIE	OTIE	UVLOE	OTE
0AH	FLTCFG2	R/W	-	-	-	-	UVTH		-	-
0BH	ISRFLT	R	-	PAT2IS	PAT1IS	PAT0IS	-	-	UVLOIS	OTIS
31H	LEDON0	W	-	-	ON5	ON4	ON3	ON2	ON1	ON0
32H	LEDON1	W	-	-	ON11	ON10	ON9	ON8	ON7	ON6
33H	LEDON2	W	-	-	ON17	ON16	ON15	ON14	ON13	ON12
34H	LEDON3	W	-	-	ON23	ON22	ON21	ON20	ON19	ON18
35H	LEDON4	W	-	-	ON29	ON28	ON27	ON26	ON25	ON24
36H	LEDON5	W	-	-	ON35	ON34	ON33	ON32	ON31	ON30
43H	PATCR	R/W	-	PAT2IE	PAT1IE	PAT0IE	-	PAT2EN	PAT1EN	PAT0EN
44H	FADEH0	R/W	FADEH0							
45H	FADEH1	R/W	FADEH1							
46H	FADEH2	R/W	FADEH2							
47H	FADEL0	R/W	FADEL0							
48H	FADEL1	R/W	FADEL1							
49H	FADEL2	R/W	FADEL2							
4AH	PAT0T0	R/W	T1				T2			
4BH	PAT0T1	R/W	T3				T4			
4CH	PAT0T2	R/W	LE		LB		LT[11:8]			
4DH	PAT0T3	R/W	LT[7:0]							
4EH	PAT1T0	R/W	T1				T2			

awinic Confidential

 Copyright © 2018 SHANGHAI AWINIC TECHNOLOGY CO., LTD

Add.	Name	W/R	BIT7	BIT6	BIT5	BIT4	BIT3	BIT2	BIT1	BIT0
4FH	PAT1T1	R/W	T3				T4			
50H	PAT1T2	R/W	LE		LB		LT[11:8]			
51H	PAT1T3	R/W	LT[7:0]							
52H	PAT2T0	R/W	T1				T2			
53H	PAT2T1	R/W	T3				T4			
54H	PAT2T2	R/W	LE		LB		LT[11:8]			
55H	PAT2T3	R/W	LT[7:0]							
56H	PAT0CFG	R/W	-	-	-	-	-	SWITCH	RAMPE	PATMD
57H	PAT1CFG	R/W	-	-	-	-	-	SWITCH	RAMPE	PATMD
58H	PAT2CFG	R/W	-	-	-	-	-	SWITCH	RAMPE	PATMD
59H	PATGO	R/W	-	PAT2ST	PAT1ST	PAT0ST	-	RUN2	RUN1	RUN0
80H	SIZE	R/W	-	-	-	-	SWSEL			

PAGE = 0x01

Add.	Name	W/R	BIT7	BIT6	BIT5	BIT4	BIT3	BIT2	BIT1	BIT0
00H	DIM0	W	-	-	DIM0					
01H	DIM1	W	-	-	DIM1					
…										
23H	DIM35	W	-	-	DIM35					

PAGE = 0x02

Add.	Name	W/R	BIT7	BIT6	BIT5	BIT4	BIT3	BIT2	BIT1	BIT0
00H	FADE0	W	FADE0							
01H	FADE1	W	FADE1							
…	…		…							
23H	FADE35	W	FADE35							

PAGE = 0x03

Add.	Name	W/R	BIT7	BIT6	BIT5	BIT4	BIT3	BIT2	BIT1	BIT0
00H	PAT0	W	-	-	-	-	-	-	PAT0	
01H	PAT1	W	-	-	-	-	-	-	PAT1	
…			-							
23H	PAT35	W	-	-	-	-	-	-	PAT35	

PAGE = 0x04

Add.	Name	W/R	BIT7	BIT6	BIT5	BIT4	BIT3	BIT2	BIT1	BIT0
00H	DIM0	W	-	-	DIM0					
01H	FADE0	W	FADE0							
02H	DIM1	W	-	-	DIM1					
03H	FADE1	W	FADE1							
……			-	-	……					
……			……							
46H	DIM35	W	-	-	DIM35					
47H	FADE35	W	FADE35							

PAGE = 0x05

Add.	Name	W/R	BIT7	BIT6	BIT5	BIT4	BIT3	BIT2	BIT1	BIT0
00H	PAT/DIM0	W	PAT0		DIM0					
01H	FADE0	W	FADE0							
02H	PAT/DIM1	W	PAT1		DIM1					
03H	FADE1	W	FADE1							
……			-		……					

awinic Confidential

 Copyright © 2018 SHANGHAI AWINIC TECHNOLOGY CO., LTD

……			……	
46H	PAT/DIM35	W	PAT35	DIM35
47H	FADE35	W	FADE35	

Detailed Register Description

IDR, Chip ID Register

PAGE: 0x00, Address: 0x00, RO, default: 0x18

7	6	5	4	3	2	1	0
ID							

Bit	Symbol	Description
7:0	ID	Chip ID is 18H

SLPCR, Sleep Control Register

PAGE: 0x00, Address: 0x01, R/W, default: 0x80

7	6	5	4	3	2	1	0
SLEEP	-						

Bit	Symbol	Description
7	SLEEP	Sleep Mode Control 0: Active mode 1: Standby mode(default)
6:0	-	Un-defined

RSTR, Reset Control Register

PAGE: 0x00, Address: 0x02, W, default: 0x00

7	6	5	4	3	2	1	0
SW_RSTN							

Bit	Symbol	Description
7:0	SW_RSTN	Soft reset control. Write “0x01” to reset all configuration register and internal logic

GCCR, Global Current Configuration Register

PAGE: 0x00, Address: 0x03, R/W, default: 0x10

7	6	5	4	3	2	1	0
IMAX				ALLON	-	-	EXPEN

Bit	Symbol	Description

awinic Confidential

 Copyright © 2018 SHANGHAI AWINIC TECHNOLOGY CO., LTD

7:4	IMAX	Global Max Current (IMAX) Setting 0000: 10mA 1000: 3.3mA 0001: 20mA(default) 1001: 6.7mA 0010: 30mA 1010: 10mA 0011: 40mA 1011: 13.3mA 0100: 60mA 1100: 20mA 0101: 80mA 1101: 26.7mA 0110: 120mA 1110: 40mA 0111: 160mA 1111: 53.3mA
3	ALLON	Force All LED Switch On 0: LED On/off is defined by registers LEDONx(default) 1: Force all LED to be on, ignored registers LEDONx
2:1	-	Reserved. Must set to “00”
0	EXPEN	Exponent Transform Enable for FADE 0: FADE parameter is 8-bit Linear code(default) 1: FADE parameter is 6-bit linear code, it is transformed into 8-bit exponential code first, and then drive output current.

FCD, Fast Clear Display Control Register

PAGE: 0x00, Address: 0x04, W, default: 0x00

7	6	5	4	3	2	1	0
FCDE							

Bit	Symbol	Description
7:0	FCDE	Fast clear display enable, write “0x01” to clear display at once.

CLKSYS, Clock Control Register

PAGE: 0x00, Address: 0x05, R/W, default: 0x00

7	6	5	4	3	2	1	0
-	-	-	-	-	-	CLK_IO	CLK_SEL

Bit	Symbol	Description
7:2	-	Un-defined. Should be set to “000000”

awinic Confidential

 Copyright © 2018 SHANGHAI AWINIC TECHNOLOGY CO., LTD

1	CLK_IO	Clock output control for pin CLKIO 0: Pin CLKIO does not output clock(default) 1: Pin CLKIO output clock
0	CLK_SEL	Clock Source Selection 0: Use internal 4MHz OSC clock(default) 1: Use clock input from pin CLKIO

FLTCFG1, Fault Configuration Register1

PAGE: 0x00, Address: 0x09, R/W, default: 0x00

7	6	5	4	3	2	1	0
-	-	UVLOPE	OTPE	UVIE	OTIE	UVLOE	OTE

Bit	Symbol	Description
7:6	-	non-defined
5	UVLOPE	UVLO Protection Enable 0: Disable UVLO protection(default) 1: Enable UVLO protection ,set SLPCR.SLEEP when ISRFLT. UVLOIS = 1
4	OTPE	Over-temperature (OT) Protection Enable 0:Disable OT protection(default) 1: Enable OT protection, set SLPCR.SLEEP when ISRFLT.OTIS = 1
3	UVIE	UVLO Interrupt Enable 0:Disable UVLO interrupt(default) 1:Enalbe UVLO interrupt
2	OTIE	Over Temperature Interrupt Enable 0:Disable OT interrupt(default) 1:Enalbe OT interrupt
1	UVLOE	Enable UVLO Detection Function 0:Disable UVLO detection(default) 1:Enable UVLO detection
0	OTE	Enable Over-Temperature Detection

awinic Confidential

 Copyright © 2018 SHANGHAI AWINIC TECHNOLOGY CO., LTD

0:Disable Over-temperature detection(default)

1:Enable Over-temperature detection

FLTCFG2, Fault Configuration Register2

PAGE: 0x00, Address: 0x0A, R/W, default: 0x00

7	6	5	4	3	2	1	0
-	-	-	-	UVTH		-	-

Bit	Symbol	Description
7:4	-	Reserved, should be set as “0000”
3:2	UVTH	UVLO Threshold Voltage Selection 00: 2.0v (default) 01: 2.1v 10: 2.2v 11: 2.3v
1:0	-	Reserved. Should be set as “00”

ISRFLT, Interrupt Status Register

PAGE: 0x00, Address: 0x0B, RO, default: 0x00

7	6	5	4	3	2	1	0
-	PAT2IS	PAT1IS	PAT0IS	-	-	UVLOIS	OTIS

Bit	Symbol	Description
7	-	Un-defined
6:4	PATxIS	Pattern controller x (x = 0~2) Interrupt Status 0: No Interrupt 1: Auto Breath Loop Finished Interrupt Request
3:2	-	Un-defined
1	UVLOIS	UVLO Detection Status 0: No UVLO detected 1: UVLO detected

awinic Confidential

 Copyright © 2018 SHANGHAI AWINIC TECHNOLOGY CO., LTD

Bit	Symbol	Description
0	OTIS	Over-temperature Detection Status 0: No Over-temperature detected 1: Over-temperature detected

LEDON0~5, Individual LED On/off Control Register

PAGE: 0x00, Address: 0x31~0x36, W, default: 0x00

7	6	5	4	3	2	1	0
-	-	ON5	ON4	ON3	ON2	ON1	ON0
-	-	ON11	ON10	ON9	ON8	ON7	ON6
-	-	ON17	ON16	ON15	ON14	ON13	ON12
-	-	ON23	ON22	ON21	ON20	ON19	ON18
-	-	ON29	ON28	ON27	ON26	ON25	ON24
-	-	ON35	ON34	ON33	ON32	ON31	ON30

Bit	Symbol	Description
7:6	-	Un-defined
5:0	ONx	LEDx On/off Control 0: LEDx off(default) 1: LEDx on

PATCR, Pattern Enable Control Register

PAGE: 0x00, Address: 0x43, R/W, default: 0x00

7	6	5	4	3	2	1	0
-	PAT2IE	PAT1IE	PAT0IE	-	PAT2EN	PAT1EN	PAT0EN

Bit	Symbol	Description
7	-	Un-defined
6:4	PATxIE	Pattern Controller x Interrupt Enable 0: Disable Pattern x Interrupt(default) 1: Enable Pattern x Interrupt
3	-	Un-defined
2:0	PATxEN	Pattern Controller x Enable

awinic Confidential

 Copyright © 2018 SHANGHAI AWINIC TECHNOLOGY CO., LTD

0: Disable Pattern x(default)

1: Enable Pattern x

FADEH0, Pattern0 Maximum Breathing Level Register

PAGE: 0x00, Address: 0x44, R/W, default: 0x00

7	6	5	4	3	2	1	0
FADEH0							

Bit	Symbol	Description
7:0	FADEH0	Maximum FADE level of Pattern0

FADEH1, Pattern1 Maximum Breathing Level Register

PAGE: 0x00, Address: 0x45, R/W, default: 0x00

7	6	5	4	3	2	1	0
FADEH1							

Bit	Symbol	Description
7:0	FADEH1	Maximum FADE level of Pattern1

FADEH2, Pattern2 Maximum Breathing Level Register

PAGE: 0x00, Address: 0x46, R/W, default: 0x00

7	6	5	4	3	2	1	0
FADEH2							

Bit	Symbol	Description
7:0	FADEH2	Maximum FADE level of Pattern2

FADEL0, Pattern0 Minimum Breathing Level

PAGE: 0x00, Address: 0x47, R/W, default: 0x00

7	6	5	4	3	2	1	0
FADEL0							

Bit	Symbol	Description
7:0	FADEL0	Minimum FADE level of Pattern0

awinic Confidential

 Copyright © 2018 SHANGHAI AWINIC TECHNOLOGY CO., LTD

FADEL1, Pattern1 Minimum Breathing Level

PAGE: 0x00, Address: 0x48, R/W, default: 0x00

7	6	5	4	3	2	1	0
FADEL1							

Bit	Symbol	Description
7:0	FADEL1	Minimum FADE level of Pattern1

FADEL2, Pattern2 Minimum Breathing Level

PAGE: 0x00, Address: 0x49, R/W, default: 0x00

7	6	5	4	3	2	1	0
FADEL2							

Bit	Symbol	Description
7:0	FADEL2	Minimum FADE level of Pattern2

PAT0T0／PAT1T0/ PAT2T0, T1 & T2 Configuration Register

PAGE: 0x00
PAT0T0:Address: 0x4A, R/W, default: 0x00
PAT1T0:Address: 0x4E, R/W, default: 0x00
PAT2T0:Address: 0x52, R/W, default: 0x00

7	6	5	4	3	2	1	0
T1				T2			

Bit	Symbol	Description
7:4	T1	T1 (Rise-time) Selection
		0000: 0.00s (default) 1000: 2.1s
		0001: 0.13s 1001: 2.6s
		0010: 0.26s 1010: 3.1s
		0011: 0.38s 1011: 4.2s
		0100: 0.51s 1100: 5.2s
		0101: 0.77s 1101: 6.2s
		0110: 1.04s 1110: 7.3s
		0111: 1.6s 1111: 8.3s
3:0	T2	T2 (On-time) Selection
		0000: 0.04s (default) 1000: 2.1s

awinic Confidential

 Copyright © 2018 SHANGHAI AWINIC TECHNOLOGY CO., LTD

0001:	0.13s	1001:	2.6s
0010:	0.26s	1010:	3.1s
0011:	0.38s	1011:	4.2s
0100:	0.51s	1100:	5.2s
0101:	0.77s	1101:	6.2s
0110:	1.04s	1110:	7.3s
0111:	1.6s	1111:	8.3s

PAT0T1／PAT1T1/ PAT2T1, T3 & T4 Configuration Register

PAGE: 0x00
PAT0T1:Address: 0x4B, R/W, default: 0x00
PAT1T1:Address: 0x4F, R/W, default: 0x00
PAT2T1:Address: 0x53, R/W, default: 0x00

7	6	5	4	3	2	1	0
T3				T4			

Bit	Symbol	Description
7:4	T3	T3 (Fall-time) Selection

0000:	0.00s (default)	1000:	2.1s
0001:	0.13s	1001:	2.6s
0010:	0.26s	1010:	3.1s
0011:	0.38s	1011:	4.2s
0100:	0.51s	1100:	5.2s
0101:	0.77s	1101:	6.2s
0110:	1.04s	1110:	7.3s
0111:	1.6s	1111:	8.3s

3:0 T4 T4 (Off-time) Selection

0000:	0.04s (default)	1000:	2.1s
0001:	0.13s	1001:	2.6s
0010:	0.26s	1010:	3.1s
0011:	0.38s	1011:	4.2s
0100:	0.51s	1100:	5.2s
0101:	0.77s	1101:	6.2s
0110:	1.04s	1110:	7.3s
0111:	1.6s	1111:	8.3s

awinic Confidential

 Copyright © 2018 SHANGHAI AWINIC TECHNOLOGY CO., LTD

PAT0T2／PAT1T2/ PAT2T2, Loop Configuration Register1

PAGE: 0x00
PAT0T2:Address: 0x4C, R/W default: 0x00
PAT1T2:Address: 0x50, R/W, default: 0x00
PAT2T2:Address: 0x54, R/W, default: 0x00

7	6	5	4	3	2	1	0
LE		LB		LT[11:8]			

Bit	Symbol	Description
7:6	LE	Loop End Point Setting 00: Loop end at OFF state(End of T3) (default) Other: Loop end at ON state(End of T1)
5:4	LB	Loop Beginning Point Setting 00: Loop begin from T1(default) 01: Loop begin from T2 10: Loop begin from T3 11: Loop begin from T4
3:0	LT[11:8]	4 MSB of Loop Times (LT). When LT[11:0] are all 0, the loop is end-less.

PAT0T3/ PAT1T3/ PAT2T3, Loop Configuration Register2

PAGE: 0x00
PAT0T3:Address: 0x4D, R/W, default: 0x00
PAT1T3:Address: 0x51, R/W, default: 0x00
PAT2T3:Address: 0x55, R/W, default: 0x00

7	6	5	4	3	2	1	0
LTL							

Bit	Symbol	Description
7:0	LT[7:0]	8 LSB of Loop Times (LT). When LT[11:0] are all 0, the loop is end-less.

PAT0CFG/ PAT1CFG / PAT2CFG, Pattern Mode Configuration Register

PAGE: 0x00
PAT0CFG: Address: 0x56, R/W, default: 0x00
PAT1CFG: Address: 0x57, R/W, default: 0x00
PAT2CFG: Address: 0x58, R/W, default: 0x00

7	6	5	4	3	2	1	0
-	-	-	-	-	SWITCH	RAMPE	PATMD

Bit	Symbol	Description

awinic Confidential

 Copyright © 2018 SHANGHAI AWINIC TECHNOLOGY CO., LTD

7:3	-	Undefined
2	SWITCH	Manual on/off Control 0: LED off(default) 1: LED on
1	RAMPE	Ramp Enable. Only active in manual control mode. 0: No ramp(default) 1: Ramp enabled
0	PATMD	Pattern Mode Selection 0: Manual control mode(default) 1: Auto breathing Mode

PATGO, Start Pattern 0/1/2 Register

PAGE: 0x00, Address: 0x59, R/W, default: 0x00

7	6	5	4	3	2	1	0
-	PAT2ST	PAT1ST	PAT0ST	-	RUN2	RUN1	RUN0

Bit	Symbol	Description
7	-	non-defined
6:4	PATxST	Pattern x Running Status 0: Pattern x is not running 1: Pattern x is running
3	-	Reserved. Should be set as “0”
2:0	RUNx	Pattern Run Control. Write “1” to corresponding bit to start up pattern x

SIZE, Display Size Configuration Register

PAGE: 0x00, Address: 0x80, R/W, default: 0x08

7	6	5	4	3	2	1	0
-	-	-	-	SWSEL			

Bit	Symbol	Description

awinic Confidential

 Copyright © 2018 SHANGHAI AWINIC TECHNOLOGY CO., LTD

Bit	Symbol	Description
7:4	-	Reserved. Should be set as “0000”
3:0	SWSEL	Current Switch Number Selection 0000: 1 current switch (C1), drive 1x12 LED 0001: 2 current switch(C1~C2), drive 2x12 LEDs 0010: 3 current switch(C1~C3), drive 3x12 LEDs Other: Reserved, don’t use(default)

PAGE, Page Configuration Register

All pages, Address: 0xf0, R/W, default: 0x00

7	6	5	4	3	2	1	0
-	-	-	-	-	PAGE		

Bit	Symbol	Description
7:3	-	Un-defined
2:0	PAGE	Page Number. Write 0xC0: set current page to page0(default) Write 0xC1: set current page to page1 Write 0xC2: set current page to page2 Write 0xC3: set current page to page3 Write 0xC4: set current page to page4 Write 0xC5: set current page to page5

Page1 Register

DIMn, DIM Current Configuration Register

Address: 0x00~0x23, W, default: 0x00

7	6	5	4	3	2	1	0
-	-	DIM					

Bit	Symbol	Description
7:6	-	non-defined
5:0	DIM	6-bit DIM parameter Setting of individual LED

awinic Confidential

 Copyright © 2018 SHANGHAI AWINIC TECHNOLOGY CO., LTD

Page2 Register

FADEn, FADE Current Configuration Register

Address: 0x00~0x23, W, default: 0x00

7	6	5	4	3	2	1	0
FADE							

Bit	Symbol	Description
7:0	FADE	8-bit FADE Parameter Setting for individual LED. When bit EXPEN of register GCCR is “1”, bits FADE[7:6] are ignored, and only FADE[5:0] is valid to provide 64-level of exponential FADE current.

Page3 Register

PATn, Pattern Selection Register

Address: 0x00~0x23, W, default: 0x00

7	6	5	4	3	2	1	0
-	-	-	-	-	-	PAT	

Bit	Symbol	Description
7:2	-	Undefined
1:0	PAT	Pattern Control Selection for individual LED 00: FADE parameter comes from FADEn register(default) 01: FADE parameter comes from pattern controller 0 10: FADE parameter comes from pattern controller 1 11: FADE parameter comes from pattern controller 2

Page4 Register

DIMn, DIM Current Configuration Register

Address: 0x00~0x46,even address only, W, default: 0x00

7	6	5	4	3	2	1	0
-	-	DIMn (Refer to definition of DIMn in page1)					

FADEn, FADE Current Configuration Register

Address: 0x01~0x47,odd address only, W, default: 0x00

7	6	5	4	3	2	1	0
FADEn (Refer to definition of FADEn in page2)							

Page5 Register

DIMn, DIM Current Configuration Register

awinic Confidential

 Copyright © 2018 SHANGHAI AWINIC TECHNOLOGY CO., LTD

Address: 0x00~0x46,even address only, W, default: 0x00

7	6	5	4	3	2	1	0
PATn (Refer to definition of PATn in page3)		DIMn (Refer to definition of DIMn in page1)					

FADEn, FADE Current Configuration Register

Address: 0x01~0x47,odd address only, W, default: 0x00

7	6	5	4	3	2	1	0
FADEn (Refer to definition of FADEn in page2)							

awinic Confidential

 Copyright © 2018 SHANGHAI AWINIC TECHNOLOGY CO., LTD

TAPE AND REEL INFORMATION

REEL DIMENSIONS

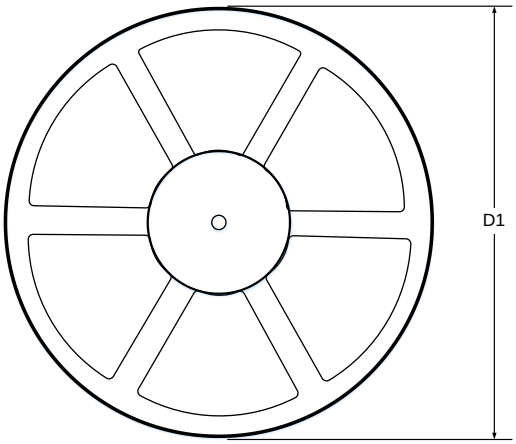

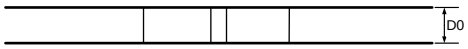

TAPE DIMENSIONS

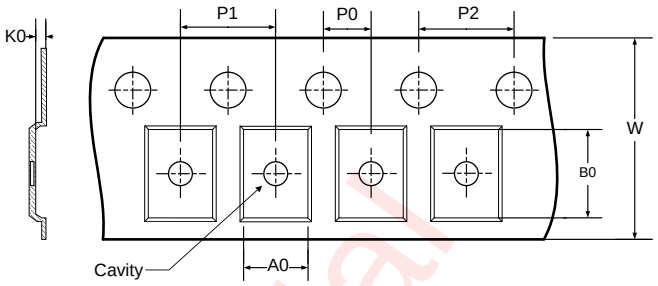

A0：Dimension designed to accommodate the component width
B0：Dimension designed to accommodate the component length
K0：Dimension designed to accommodate the component thickness
W：Overall width of the carrier tape
P0：Pitch between successive cavity centers and sprocket hole
P1：Pitch between successive cavity centers
P2：Pitch between sprocket hole
D1：Reel Diameter
D0：Reel Width

QUADRANT ASSIGNMENTS FOR PIN 1 ORIENTATION IN TAPE

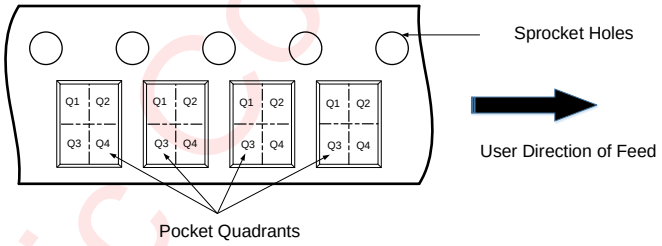

All Dimensions are nominal

D1 (mm)	D0 (mm)	A0 (mm)	B0 (mm)	K0 (mm)	P0 (mm)	P1 (mm)	P2 (mm)	W (mm)	Pin1 Quadrant
330	12.4	4.3	4.3	1.1	2	8	4	12	Q1

awinic Confidential

 Copyright © 2018 SHANGHAI AWINIC TECHNOLOGY CO., LTD

PACKAGE DESCRIPTION

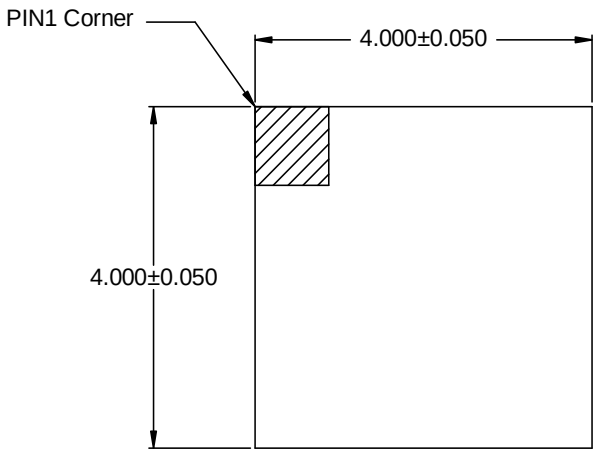

TOP VIEW

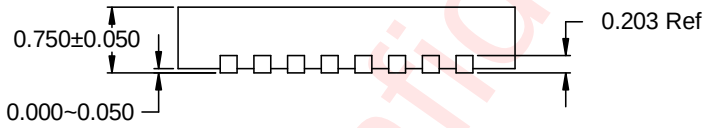

SIDE VIEW

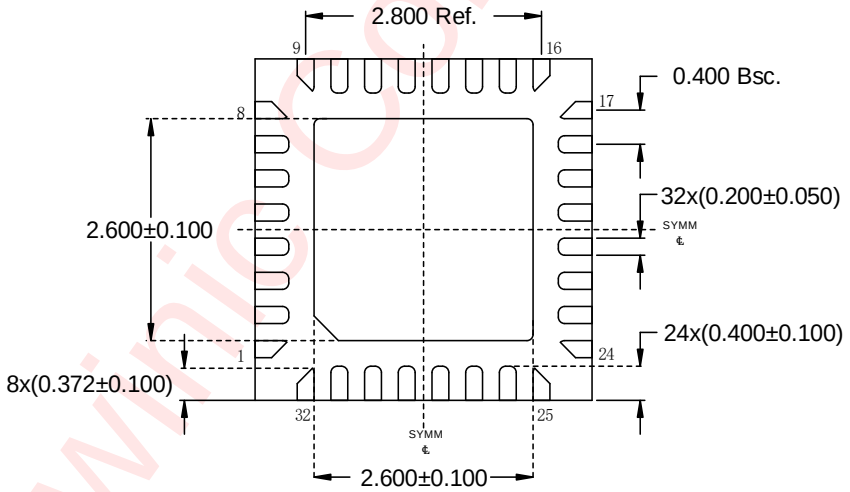

BOTTOM VIEW

All Dimensions are in Millimeters

awinic Confidential

 Copyright © 2018 SHANGHAI AWINIC TECHNOLOGY CO., LTD

LAND PATTERN

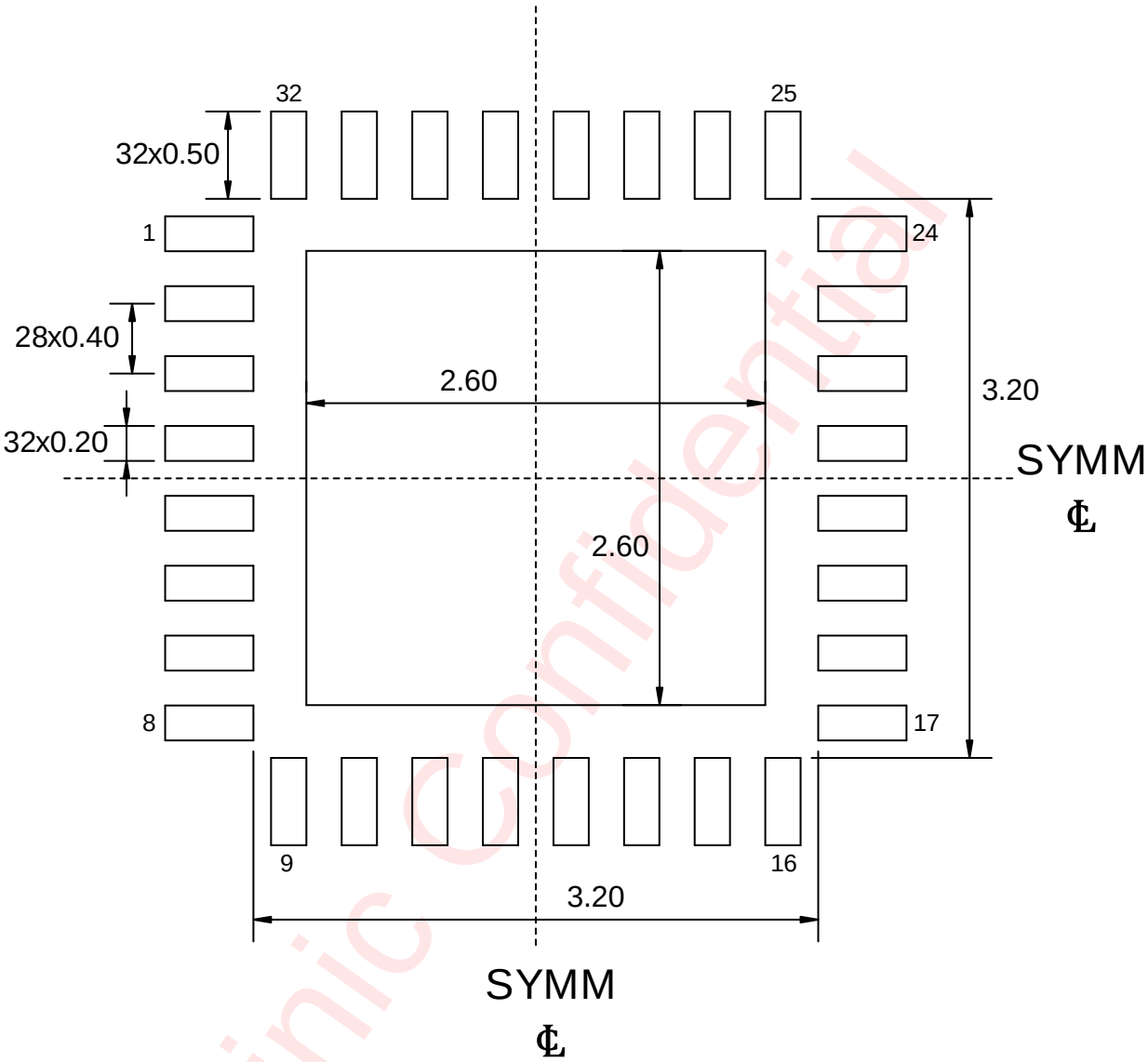

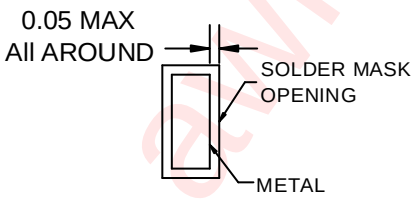

NON SOLDER MASK DEFINED

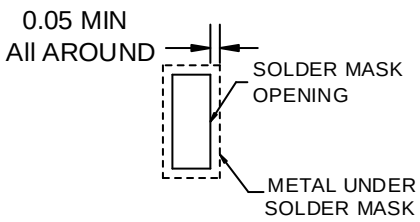

SOLDER MASK DEFINED

Dimensions are all in Millimeters

awinic Confidential

 Copyright © 2018 SHANGHAI AWINIC TECHNOLOGY CO., LTD

REVISION HISTORY

Version	Date	Revision Record
V1.0	Apr. 2018	First officially release
V1.1	Nov. 2018	Added the quiescent current in active mode --page6 Added the power on procedure --page9
V1.2	Jan. 2019	Added the value of max current of each current sink with different IMAX[3:0] Modify the match accuracy Modify the dropout voltage for Rx --page6
V1.3	Apr. 2019	Modify the I^2C interface description --page1 --page10
V1.4	Jun. 2019	Modify the note of typical application circuit --page1 --page3 --page4 Modify the software reset description --page10
V1.5	Mar. 2022	Modify the SLPCR register bit7 description --page23

awinic Confidential

 Copyright © 2018 SHANGHAI AWINIC TECHNOLOGY CO., LTD

DISCLAIMER

Information in this document is believed to be accurate and reliable. However, Shanghai AWINIC Technology Co., Ltd (AWINIC Technology) does not give any representations or warranties, expressed or implied, as to the accuracy or completeness of such information and shall have no liability for the consequences of use of such information.

AWINIC Technology reserves the right to make changes to information published in this document, including without limitation specifications and product descriptions, at any time and without notice. Customers shall obtain the latest relevant information before placing orders and shall verify that such information is current and complete. This document supersedes and replaces all information supplied prior to the publication hereof.

AWINIC Technology products are not designed, authorized or warranted to be suitable for use in medical, military, aircraft, space or life support equipment, nor in applications where failure or malfunction of an AWINIC Technology product can reasonably be expected to result in personal injury, death or severe property or environmental damage. AWINIC Technology accepts no liability for inclusion and/or use of AWINIC Technology products in such equipment or applications and therefore such inclusion and/or use is at the customer's own risk.

Applications that are described herein for any of these products are for illustrative purposes only. AWINIC Technology makes no representation or warranty that such applications will be suitable for the specified use without further testing or modification.
All products are sold subject to the general terms and conditions of commercial sale supplied at the time of order acknowledgement.

Nothing in this document may be interpreted or construed as an offer to sell products that is open for acceptance or the grant, conveyance or implication of any license under any copyrights, patents or other industrial or intellectual property rights.

Reproduction of AWINIC information in AWINIC data books or data sheets is permissible only if reproduction is without alteration and is accompanied by all associated warranties, conditions, limitations, and notices. AWINIC is not responsible or liable for such altered documentation. Information of third parties may be subject to additional restrictions.

Resale of AWINIC components or services with statements different from or beyond the parameters stated by AWINIC for that component or service voids all express and any implied warranties for the associated AWINIC component or service and is an unfair and deceptive business practice. AWINIC is not responsible or liable for any such statements.

awinic Confidential

 Copyright © 2018 SHANGHAI AWINIC TECHNOLOGY CO., LTD